Vidya Vikas Education Trust's
Universal College of Engineering
Accredited with B+ Grade by NAAC
(Permanently Unaided | Approved by AICTE, DTE & Affiliated to University of Mumbai)

# Current Wave

*The Official Newsletter of Dept. of EXTC,UCOE*

july_2022, VOLUME 5, EDITION 1



## College Profile:

*Everything you need to know about us*:

Embraced by lush greenery and scenic beauty, Universal College of Engineering is a treasured place for aspiring engineers to leave their imprints on success.

As a college within the wider network frame, we are one of the fastest- growing institutions in India. Our institute has been accredited by the National Assessment and Accreditation Council(NAAC) with a B+ grade in the first cycle of accreditation. Times of India Survey Ranked No.1 in India among Top Emerging Private Engineering Institutes for 6 consecutive years 2015, 2016, 2017, 2018, 2019, and 2020 and the saga of accolades still continues.

In response to the expectations of quality technical education, our college is approved by the All-India Council for Technical Education (AICTE), New Delhi; Recognized by the Directorate of Technical Education (DTE), Government of Maharashtra; affiliated to Mumbai University. Our college is also associated with professional bodies like IEEE, IETE, ISA, and CSI to update the revolutionary technological advancements.

## *We offer 4 years of full-time Bachelor of engineering programs in Computer Engineering, Civil Engineering, Artificial Intelligence & Machine Learning, Information Technology and Data Engineering.*

The unique state-of-the-art facility of the institute has been carefully designed to accommodate the needs of the students. Laboratories are equipped with world-class facilities based on the latest technology of different sectors. Our smart classrooms are well ventilated, spacious, and equipped with overhead and LCD projectors along with the public address system. The Collegelibrary provides a rich collection of specialist library resources and services to support student's academic work and enrich their research skills.


We are obliged to equip our students to get placed in highly reputed companies by mentoring their necessary skill set for cutting-edge technologies. The core highlighted areas are helping students with their technical competency, communication skills along with career guidance and counseling.

Universal College of Engineering has produced a large number of successful alumni who are working in reputed organizations in India and abroad and have contributed immensely to the cause of nation- building and society. We welcome all engineering aspirants to create an incredible legacy in the field of engineering.

# Wi-Fi 7—More Than Just Extremely High Throughput

Hot on the heels of Wi-Fi 6E, the 7th generation Wi-Fi technology, also referred to as IEEE 802.11be or Wi-Fi 7, is just around the corner! It will be the fastest Wi-Fi technology ever and a game-changer, providing a much better user experience for networking and online activities in our everyday life. It will enable and accelerate many demanding applications such as 8K video streaming, full immersion AR/VR, gaming, and cloud computing. This article will review the key features supported in 802.11be Release 1 and understand the benefits of Wi-Fi 7 and how it can enable future connectivity.

**Wi-Fi 7 Key Features**

- ***320 MHz Channel Bandwidth***

With the 6 GHz band opened to Wi-Fi applications, Wi-Fi 7 supports a maximum 320 MHz channel bandwidth on the 6 GHz band while supporting 20/40/80/160 MHz channel bandwidth on both 5 GHz and 6 GHz bands and 20/40 MHz on the 2.4 GHz band. 320 MHz channels bandwidth alone doubles the maximum speeds for Wi-Fi 7 compared to existing Wi-Fi 6/6E.

Quadrature amplitude modulation (QAM) is used extensively as a Wi-Fi modulation scheme that simultaneously mixes both amplitude and phase variations in a carrier. Wi-Fi 6 supports up to 1024 QAM—each constellation point on the left represents 10-bit data (symbol) in Figure 2. Wi-Fi 7 supports 4096 QAM—each constellation point on the right represents 12-bit data (symbol). In other words, each point modulated with QAM in Wi-Fi 7 can carry 2 bits of more information than Wi-Fi 6. That is a 20% increase in speed.

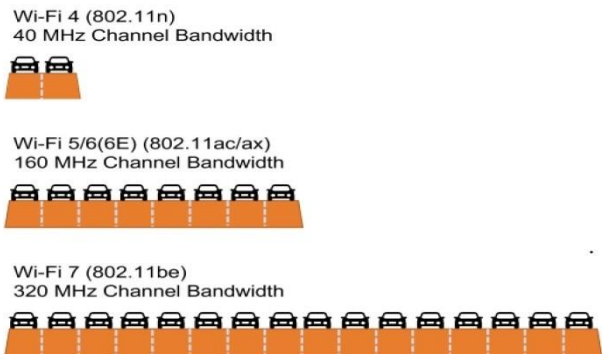


- **Multi-Link Operation (MLO).**

Multi-link Operation (MLO) is a vital and helpful feature in Wi-Fi 7. It enables devices to transmit and receive across multiple bands and channels simultaneously. It is similar to but more sophisticated and flexible than the link aggregation or trunking features of wired (i.e., Ethernet) networking. It creates a bundling or bonding of multiple links (radios) in different bands and channels to work as one virtual link between the connected peers. Each link (radio) can work independently and simultaneously with other links or coordinate for optimal aggregate speeds, latency, range (coverage), or power saving. Wi-Fi 7 MLO is a MAC-layer solution for concurrently using multiple links and is transparent to the higher-layer protocols and services. MLO can improve throughput, link robustness, roaming, interference mitigation, and reduce latency.

For example, in a home mesh network formed with triband (6 GHz, 5 GHz, 2.4 GHz) mesh nodes or access points (APs), MLO can form a high-speed, low-latency wireless backbone for the home network and provide backhaul for the devices connected to the mesh nodes/APs. If each mesh node supports 4×4 triband concurrent configuration, the aggregate backhaul (backbone) supports speeds up to 21.6 Gbps. With MLO, the backhaul (backbone) is also more robust and reliable. If the 5 GHz link is interrupted by radar (DFS), the traffic can be automatically switched to the 6 GHz and 2.4 GHz links without service interruption or quality of service (QoS) degradation. Compared to Wi-Fi 7 MLO-based backhaul, today's Wi-Fi 6 and 6E mesh solutions use one of the 4×4 radios to form the wireless backhaul, which only provides 4.8 Gbps speeds. If there is interference or interruption to that link, the whole backhaul (backbone) is impacted or broken, thus causing QoS degradation or interruption. When the client devices, such as smartphones, laptops, etc., support multiple radios, MLO creates a larger pipe between the devices and AP for higher speeds, lower latency, and higher reliability and improves the user experience for seamless roaming.

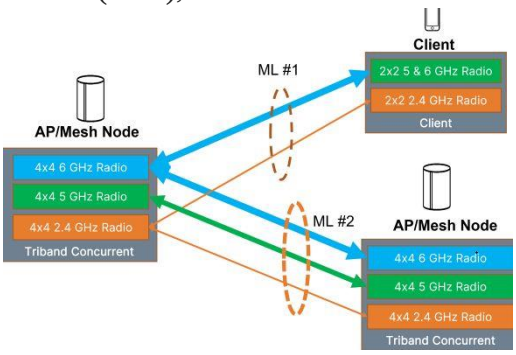

- ***Multi-Resource Units (MRU)***

Wi-Fi 7 adds new resource unit (RU) allocation mechanisms. Compared to Wi-Fi 6, in which AP assigns only a single RU to each STA (non-AP STA), Wi-Fi 7 allows multiple resource units (MRU) to be set to one non-AP STA. MRUs further improve spectrum utilization efficiency, provide more flexibility for bandwidth (QoS) control per STA based on needs, and enhance interference mitigation and coexistence with incumbent equipment operating on the same band or channel.

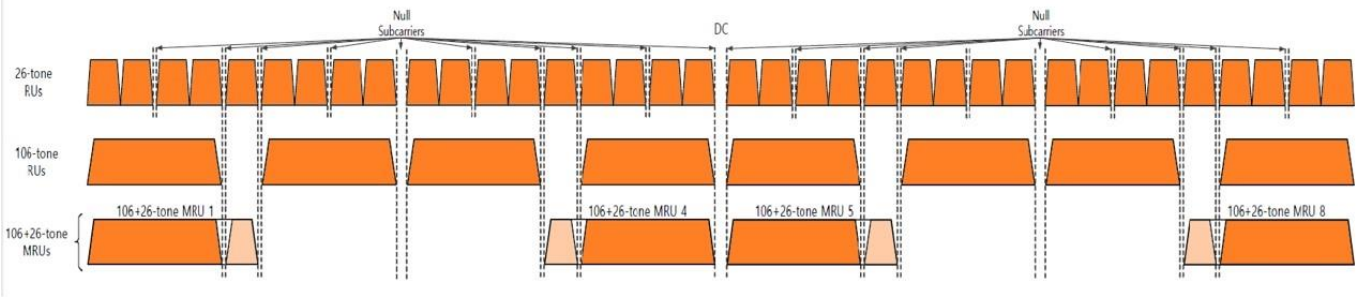


*Figure. RU & MRU of 320 MHz OFDMA PPDU*

Such MRU mechanisms support both orthogonal frequency division multiple access (OFDMA) and non-OFDMA (i.e., MU-MIMO) modes. OFDMA mode supports small MRUs and larger MRUs to allow more flexibility to allocate the RU/MRUs without complicating the MAC and scheduler designs. The non-OFDMA mode provides the most flexibility in the preamble puncturing of sub channels.

For example, any 20 MHz sub channels except for the primary one or 40/80 MHz channels can be punctured in 320 MHz bandwidth. This allows the transmission to maximize the utilization of the spectrum of the channel when there is interference and provides the best coexistence if there is an incumbent device operating on a specific spectrum section of the channel.

There are many new features and improvements in Wi-Fi 7. Such features include preamble puncturing, target wake time (TWT) and restricted TWT (rTWT), extended-range (MCS 14 and MCS 15), etc. Other features such as multi-AP coordination (coordinated beam forming, coordinated OFDMA, coordinated spatial reuse, joint transmission), 16 spatial streams, and HARQ, etc., may be supported in Release 2 and are not covered in this article.

The EPC2050 measures just 1.95 mm x 1.95 mm. This tiny size enables power solutions that occupy ten times less area than comparable silicon solutions.

Applications benefiting from the fast-switching speed and tiny size of the EPC2050 include DC-DC conversion from/to 120 V-160 V such as in aerospace applications, 120 V-150 V motor control for medical motors, DC-AC inverters, multi-level converters such as Totem Pole PFC and DC-DC solutions converting 400 V input to 12 V, 20 V or 48 V outputs. Additional applications include fast chargers, battery management systems, electric vehicle charging, solar power inverters, high power LiDAR for autonomous cars and delivery vehicles, LED lighting, RF switches, and consumer & industrial wirings like wall-mounted sockets and Class D Audio.

**How Will Wi-Fi 7 Benefit End Users?**

- **Extremely High Throughput**
- **Ultra-Low Latency**
- **More Robust Connection**
- **Better Interference Mitigation and Coexistence**
- **Better Roaming User Experience**
- **Even Higher Spectral Efficiency**
- **Higher Power Efficiency and More Power Saving**
- **More Emerging Wi-Fi Sensing Applications**

Wi-Fi 7 will significantly improve user experience in many ways and become more economically efficient. It can enable and enhance many demanding applications, such as cloud gaming, immersive AR/VR, 8K video streaming, **Industry** 4.0, etc. Users can expect much higher speed, lower latency, and more robustness from Wi-Fi 7 than what existing Wi-Fi 6/6E can provide.

# *Why 5G Deployment will be a Core Component in Future Military Applications*

Despite 5G deployment being in its infancy, the promise of high-speed, high-bandwidth and low-latency communications has already cemented its position as one of the core components of future applications. With the US Department of Defense investing heavily in 5G capabilities, it is clear that the military's uses of 5G will not be limited to the battlefield. Their desire to improve efficiencies across the board are looking to be met with the new 5G applications that are being added to these timing and synchronization products.

There are several ways in which the military capability will be improved thanks to this new and exciting development. Coupled with advances in Artificial Intelligence (AI) and the increased processing power offered by next-generation processors and distributed systems, 5G will enable applications including autonomous vehicles, virtual and augmented reality and smart cities. The sheer volume of information that can be shared due to these capabilities will enable near real-time decision-making in situations that current military communication networks are unable to provide.

With Microchip's heritage in military timing devices dating back to 1938, we have continually seen technology improve military efficiencies through an array of solutions. Our portfolio is extensive with frequency, timing and synchronization products including SAW filters, crystal oscillators, GNSS-disciplined oscillators and more. We have worked on security, reliability and secure communications used in autonomous weapons to name a few, with our products reducing risk, increasing productivity and speeding up mission time over the years. Therefore, it is clear to us that the advancements being made with 5G technology is vital and when looking to grow the military's capabilities further it is clear that we should embrace this new technology being developed.

**On the Battlefield**

When looking to the battlefield there are many ways in which 5G applications can improve how efficiently the military work together. Each new development will go work together in creating a more methodical approach with tactical and strategic advantages.

- Battlefield sensors will be used in many forms, providing commanders with continuously updated information. The sensors can be attached to many things including, a camera mounted on a soldier's helmet, radars mounted on aircrafts, and they can be integrated into a combined intelligence stream. This will help eliminate the chaos and impose order by means of intelligence, communication, and control.
- Augmented reality displays for a pilot in a cockpit or an infantry soldier in a bunker will provide situational awareness that was previously unobtainable. The military will be able to automatically label objects in the pilot's field of view with information on distance, speed, bearing, and altitiude. Therefore, when a potential threat is picked up by the sensors it will project this information to the pilot or infantry soldier.
- Virtual reality will enable improved operations of remote vehicles for air, land, and sea missions.

**Off the Battlefield**

The military's use of 5G deployment is not limited to the battlefield. Military installations will be able to improve efficiencies in several other areas including:

- As showcased by the Department of Defence's press release, smart warehouse operations with high-speed downloads and sub 15 milliseconds latency, using 380 MHz of spectrum in the mid-band and mmWave are made possible through 5G applications. This development will help with an enhancement in the operation of autonomous vehicles for inventory management, machine learning for inventory tracking, and virtual reality applications to improve workforce efficency.
- According to research by Dr. Paul A. Young, telemedicine will be improved considerably with the help of 5G, providing real-time virtual and digital medical support anywhere in the world. Thereby offering medical providers' access to real-time data and giving them the ability to make split-second decisions which are critical to healthcare environments.
- Troop transportation will also become more efficient due to the 5G capabilities connecting soldiers, vehicles, command posts, ships, satellites, and planes together with consistent information.

**Critical Elements of 5G Networks**

Frequency control, timing and synchronization are critical elements of all 5G networks. To support the high-bandwidth and low-latency requirements, high frequency oscillators with low phase noise and narrow band SAW filters are essential to ensure channel spacing.

IEEE 1588 grandmasters are required to distribute and synchronize time across a network to nanosecond precision. Atomic clocks with sub-microsecond accuracies over prolonged Global Navigation Satellite System (GNSS) outages are required for resiliency.

Military 5G applications add an extra layer of complexity to these functional blocks as the devices must survive and operate in harsh environments as well as overcoming obstacles such as high-power jamming signals, due to the wide bandwidths covered by 5G systems. Jammers will have to follow into the millimeter-wave range to jam close-range systems. It is also key that the soldier-mounted devices are light weight, battery operated, and able to survive the extremely rapid temperature, shock, and vibration of an air drop. Lastly, the land, air, and sea vehicle-mounted devices must operate and maintain synchronization in each of the unique vibration and temperature environments presented by these applications.

However, despite these obstacles it is clear the new timing and synchronization products with 5G **applications** have enormous potential and could be the key to improving the military's communication networks.

## *Breaking Down Artificial Intelligence*

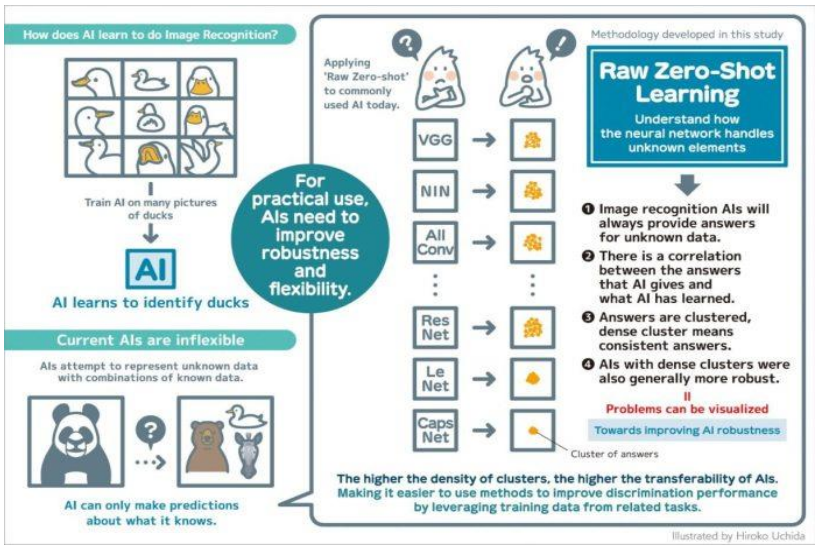


Today's artificial intelligence systems used for image recognition are incredibly powerful with massive potential for commercial applications. Nonetheless, current artificial neural networks—the deep learning algorithms that power image recognition—suffer one massive shortcoming: they are easily broken by images that are even slightly modified.

This lack of "robustness" is a significant hurdle for researchers hoping to build better AIs. However, exactly why this phenomenon occurs, and the underlying mechanisms behind it, remain largely unknown.

Aiming to one day overcome these flaws, researchers at Kyushu University's Faculty of Information Science and Electrical Engineering have a method called "Raw Zero-Shot" that assesses how neural networks handle elements unknown to them. The results could help researchers identify common features that make AIs "non-robust" and develop methods to rectify their problems.

"There is a range of real-world applications for image recognition neural networks, including self-driving cars and diagnostic tools in healthcare," explains Danilo Vasconcellos Vargas, who led the study. "However, no matter how well trained the AI, it can fail with even a slight change in an image."
In practice, image recognition AIs are "trained" on many sample images before being asked to identify one. For example, if you want an AI to identify ducks, you would first train it on many pictures of ducks.
Nonetheless, even the best-trained AIs can be misled. In fact, researchers have found that an image can be manipulated such that—while it may appear unchanged to the human eye—an AI cannot accurately identify it. Even a single-pixel change in the image can cause confusion.

To better understand why this happens, the team began investigating different image recognition AIs with the hope of identifying patterns in how they behave when faced with samples that they had not been trained with, i.e., elements unknown to the AI.
"If you give an image to an AI, it will try to tell you what it is, no matter if that answer is correct or not. So, we took the twelve most common AIs today and applied a new method called 'Raw Zero-Shot Learning,'" continues Vargas. "Basically, we gave the AIs a series of images with no hints or training. Our hypothesis was that there would be correlations in how they answered. They would be wrong, but wrong in the same way."
What they found was just that. In all cases, the image recognition Artificial Intelligence would produce an answer, and the answers—while wrong—would be consistent, that is to say, they would cluster together. The density of each cluster would indicate how the AI processed the unknown images based on its foundational knowledge of different images.

"If we understand what the AI was doing and what it learned when processing unknown images, we can use that same understanding to analyze why AIs break when faced with images with single-pixel changes or slight modifications," Vargas states. "Utilization of the knowledge we gained trying to solve one problem by applying it to a different but related problem is known as Transferability."
The team observed that Capsule Networks, also known as CapsNet, produced the densest clusters, giving it the best transferability amongst neural networks. They believe it might be because of the dynamical nature of CapsNet.

"While today's AIs are accurate, they lack the robustness for further utility. We need to understand what the problem is and why it's happening. In this work, we showed a possible strategy to study these issues," says Vargas.
"Instead of focusing solely on the accuracy, we must investigate ways to improve robustness and flexibility. Then we may be able to develop a true artificial intelligence."

# International Day of Yoga Celebration in College

International Day of Yoga is celebrated every year on 21st June. This year, the day is celebrated by NSS unit in collaboration with Women's Development Cell of college. On the occasion expert session was taken by Prof. Rajesh Dubey (HoD -Civil Engineering Department) followed by yoga session for volunteers and students.



VidyaVikas Education Trust's
Universal College of Engineering
Kaman-Bhiwandi Road, Survey
No. 146 (Part), Village Kaman, Taluka Vasai,
District Palghar-401208
Ph- 8007090722, 8407979167, 8007478659
Website: www.ucoe.edu.in/www.universalcollegeofengineering.edu.in